MMME3033

BEng Major Design Project

Used Plates Collector:

Design Against Food waste in Buffets

Changyuan XIE

20029502

2021. May

University of Nottingham
UK | CHINA | MALAYSIA

Declaration of Originality

MMME3033

The University's statement on plagiarism can be found on Moodle, the University's website[1] and in the Student Handbook. Please read those resources carefully THEN read and sign the declaration below.

Student Name: Changyuan XIE

Student Number: 20029502

Coursework Title: Major Design Project Report

I confirm that:

- ☑ I read and understood the guidance on plagiarism in the Student Handbook and on Moodle.
- ☑ I am aware of the fact that my work will be checked for potential plagiarism through TURNITIN.
- ☑ I have clearly referenced in accordance with the faculty requirements, in both the text and the bibliography or references, all sources used in the coursework.
- ☑ I fully referenced (including page numbers) and used inverted commas for all text quoted from books, journals, web etc. (Please check with the Department which referencing style is to be used).
- ☑ I provided the sources for all tables, figures, data etc. that are not my own work.
- ☑ All data and findings in the work have not been falsified or embellished;
- ☑ This work has not been previously, or concurrently, used either for other modules or within other modules by me or any other student.
- ☑ I have not sought or used the services of any professional agencies to produce this work, except for the final 3D printed model.

DECLARATION (please insert your signature by hand and scan the document)

I declare herewith, that the above-mentioned coursework is the result of my own original work. In addition, I appreciate that any false claim in respect of this work will result in disciplinary action in accordance with university or departmental regulations.

Signature: 谢昌源 Date: 2021.05.23

[1] https://www.nottingham.ac.uk/studyingeffectively/writing/plagiarism/index.aspx
Do you understand plagiarism? How much do you understand plagiarism - try our quiz and find out.
https://www.nottingham.ac.uk/studyingeffectively/writing/plagiarism/quiz1.aspx

Contents

Abstract 3
1 Introduction 4
1.1 Design Topic 4
1.2 Problem and Opportunity Definition 5
2 Design Research 6
2.1 Market Research 6
2.1.1 Competitors' Products 6
2.1.2 Benchmarking & Trends 7
2.2 User Research 8
2.2.1 Methods 8
2.2.2 Observational Findings 8
2.3 Context Research 9
2.4 Research Findings 10
3 Design Constraints 11
3.1 Production Quantities 11
3.2 Size Restrictions 12
4 Concepts Development 13
4.1 Methodology 13
4.2 Iteration 1 13
4.2.1 Directions Generation 14
4.2.2 Direction Evaluation 16
4.2.3 Direction Clustering 17
4.3 Iteration 2 18
4.3.1 Additional Research 18
4.3.2 Idea Generation 20
4.3.3 Ideas Evaluation 22
4.3.4 Ideas Clustering 23
4.4 Iteration 3 23
4.4.1 Idea Development 23
4.4.2 Design Exploration 24
4.5 Concept Definition 25
4.6 Preliminary Test and Evaluation 26
5 Product Development 27
5.1 CAD Model 27
5.2 Prototyping 28
6 Materials and Manufacture 29
7 Evaluation 31
7.1 Aesthetic Requirements 31

7.2 Functionality Requirements 32
8 Final Design 33
8.1 Product Description 33
8.1.1 Major Features Descriptions 33
8.1.2 System Analysis 34
8.2 Product Differentiation 35
8.3 Design Functionality 35
Reference 36
Appendix 36

Abstract

With the rise of the global population and living standards, food shortage is becoming a severe and massive issue. China has put in place a number of policies to control food waste, and the result is noticeable. However, as one of the significant types of food services, buffets are still deeply linked with food waste. Traditional methods can hardly address the root cause, while high-tech solutions have limited relevance to the buffet setting. This project proposed an exploratory concept: used plates collector, which makes donation commitments to food-deprived populations base on the number of used plates returned by the customers. The customers are expected to pick food following the principle of "little and often" due to this incentive, thus subconsciously reducing the likelihood of food waste. As a result, the proposed concept can solve the food waste issue to some extent and different from the existing solutions.

1 Introduction

Food wasting has been a significant problem for decades, and governments have carried out strategies to fight against it. However, buffets in current China are still wasting more food than any other service models. In this project, the dilemmas behind the phenomena are studied with secondary and primary research from both foodservice providers and customers perspectives. The core conflict is customers' unique expectations under the buffets' context and the lack of awareness regarding food preservation. After insights are extracted, three iterations of idea generations and developments are conducted to achieve an optimal solution for the defined design question. Then, the final idea is further developed into a manufacture-ready solution that is evaluated as successfully fit the design requirements and constraints.

1.1 Design Topic

Food waste is referring to food that is not eaten, resulting from the decisions and actions of retailers, food service providers, and consumers (Gustavsson *et al.*, 2011). According to the Food and Agriculture Organization of the United Nations (Wang *et al.*, 2017), global food waste and loss add up to between one-third and one-half of all the food produced. Medium-income countries waste approximately 100 kilograms of food, particularly in the consumption stage, per person annually (Gustavsson *et al.*, 2011). In China, food waste is highly related tomiddle-to-high-end restaurants where 132 grams of food is wasted per meal per person, which is significantly higher than the average food waste in China's urban restaurants (Wang *et al.*, 2017). Recently, despite the recent call by President Xi to reduce food waste, buffet restaurants are still the worst model in terms of food waste.

1.2 Problem and Opportunity Definition

While other foodservice models have been gradually reducing food waste due to government policy and increasing environmental awareness, food waste in buffets remains a persistent problem. Current solutions such as fines, time limits, and frequent reminders do not go far enough to address the phenomenon's core conflicts. The success of food conservation in other types of food services and the persistence of food waste in buffets suggest the key to solving this problem might be the unique user expectation in buffets. Thus, the customers' behaviours and thoughts linked with food waste should be first resolved before aiming for less food waste; otherwise, the strategies may conflict with the stakeholders' interests or be superficial, thus resulting in failures.

2 Design Research

2.1 Market Research

The existing products designed to address food waste in the service sector are researched and analysed to identify possible design directions opportunities. It is found that the competitors' products can deal with restaurant food waste to some extent but are not targeted at buffets. Furthermore, the existing products are not designed for China's cultural context, resulting in the potential effect not being fully realised.

2.1.1 Competitors' Products

Regarding the context of the foodservice sector, there are mainly three types of products and solutions provided by competitors for food waste management. Following the flow of food, products in the first category aim to nudge the customers' behaviours. For example, there are fewer food quantities in buffet settings supported by existing studies through smaller plates, smaller portions, or tray removal. However, the effectiveness of these products in reducing food waste has only beenproven in research, and there is no corresponding method to track their effectiveness in practice easily.

Another category includes solutions to monitor and track how and what food is being thrown away, monitor trends, and help staff makes informed decisions to reduce the amount of wasted food. These solutions typically consist of a waste bin and a feedback terminal or APP. The waste bin has a built-in scale and a camera to identify the weight and type of food waste with artificial intelligence. Such solutionscan also generate in-depth digests with insights regarding food stocking suggestions, most wasteful entries, and trends over time. The major drawback of such solutions is that they cannot make stocking or food preparation suggestions based on the customers' food consumption, but only what they wasted—specific brands including Winnow Systems and LeanPath.

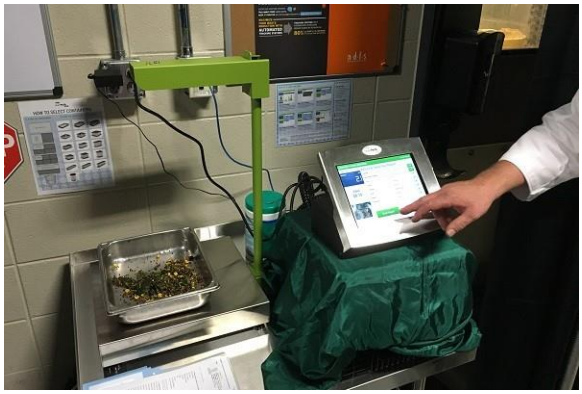

Fig. 1 LeanPath Food Waste Prevention

The last category of products is dedicated to reducing the environmental impact offood that has been wasted by disposing of it properly. Typical products include foodwaste grinders or composting bins. However, their disadvantages are apparent: they require much space and can cause odour (unpleasant smells). Therefore they are not widely utilised in the catering industry.

2.1.2 Benchmarking & Trends

There are design opportunities and the market need for a comprehensive solutionagainst food waste, especially regarding the buffet setting, which is the most wasteful business model as covered previously. However, the existing products primarily focus on a specific phase of food services or food events, thus can hardly be used by a restaurant under a buffet setting. Therefore, novel products or systems could be proposed to create further market segmentation.

By analysing the existing competing products, some insights have been summarised based on their strengths and weaknesses, which can benchmark and evaluate design ideas.

1. The product should be easy-to-use, thus avoid people get annoyed by difficult interactions. Intuitive interaction can be achieved through a high degree of intelligence, automation, or semantics. There could also be incentives or clear indications of how much effort for the environment the user has done by taking specific actions. On the other hand, it is necessary to minimise the awareness of customers regarding the product. An example could be behaviour nudging, in which people are influenced even without notices.

2. Existing solutions are somewhat fragmented, meaning that food waste is only reduced within a specific phase of the food servicing journey. To create unique selling points and better suit the buffet setting, it might good to link multiple stages that food waste may happen or committed.

2.2 User Research

2.2.1 Methods

User research is conducted given that plate wastes make a significant part of the food waste in buffets and are directly linked with customers' decisions and behaviours. Specifically, observations on the buffets' customers are conducted, andthe author also experiences the process of consuming in buffets.

Further, user interviews and questionnaires are conducted covering different age groups, genders, and social statuses. An affinity diagram is then produced to clusterviews on the same subject but various on the description.

2.2.2 Observational Findings

1. **No one wastes food intentionally.**

   If someone left some food unfinished in a buffet restaurant, that does not mean he/she is deliberately doing that. In buffets where customers need to serve themselves, it is often the case that people take a lot at once just because they find it too annoying to pick up food multiple times. Others feel that they accidentally take a lot due to their subconscious greed or just enjoying picking food.

2. **Eating up all food on the plate is becoming positive.**

   Although people in the last century perceive the left of food to demonstrate their wealth and generosity, however, more and more and more people are aware of the problem of food wasting and consider leaving no food on one's plates of a responsible and respectful move. Therefore, providing positive feedback to those who behave responsibly could be a strategy in designing against food waste.

3. **Buffets with overly restrictive rules against food waste can be off-puttingto customers.**

   While most people understand the importance of preventing food waste and are thus willing to cooperate, excessive rules from the restaurant can still be adverse to their images and lead to decreased sales.

2.3 Context Research

The concept of this project is defined as buffets in China, where food waste remainsa significant issue. By reading through the literature, conducting field trip observations and interviews, the background information regarding the design context is collected and analysed to extract insights.

In buffets, customers pay a fixed price for one meal in which they could help themselves with as much food or drink as they wish. Therefore, there is a weak correlationbetween the amount of food picked up and the money paid. Further, it resulted in a more inadequate money incentive for food conservation, so more food is likely to be wasted (Eckert Matzembacher *et al.*, 2020). This also means customers may be less motivated to reduce food waste because they have to pay the same amount despite how much food they take.

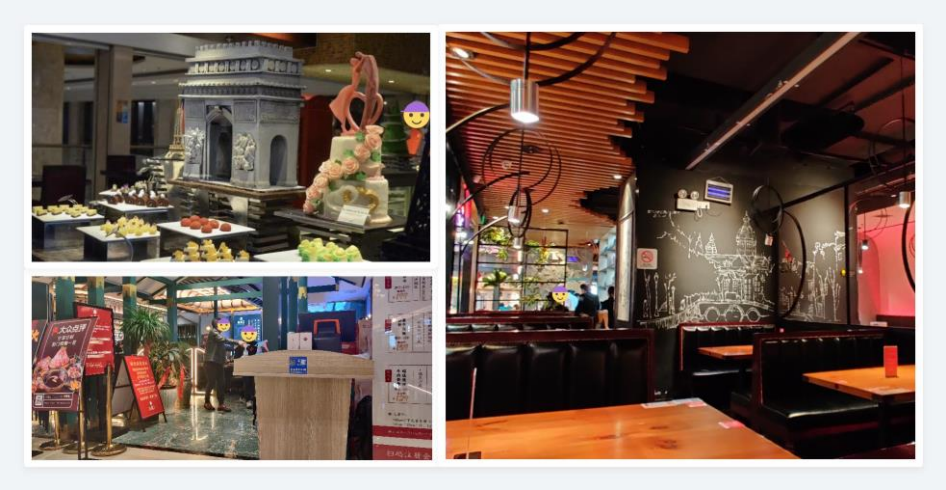

Fig. 2 Design context: Chinese buffet restaurants (First-hand research)

2.4 Research Findings

1. The essence of a buffet is a psychological game between business and customers.

   Buffets always aim to bring customers multi-sensory enjoyment and make themfeel worthwhile. Also, they want to feed customers with low-price food and eliminate food waste to maximise the profit. This suggests the design should not infringe on stakeholders' interests or require them to make a significant effort to adapt.

2. The market gap exists: the buffet model requires a focused and systematic solution to fight against wasting.

   As one of the significant types of food services, typical buffets have an unusual amount of waste. However, there are only food waste reduction solutions on the market only for general "restaurants". Current solutions specific for buffets are mostly superficial.

3. Customers' behaviours are the critical factor to food waste in the buffet.

   Given that customers pick and consume the food in buffets and buffets trying to meet their expectations, the mainstream perspectiveof customers can largely influence the actual extent of food wasting. Therefore,it is crucial t change customers' mindsets.

3 Design Constraints

Given the possible scenarios, interactions, and possible ways of human interactions, constraints are proposed regarding design ideas to ensure thefinal product works smoothly throughout its lifecycle.

3.1 Production Quantities

According to (Zhang, Wu and Wang, 2014), the number of buffet restaurants accounts for around 7% of all food and beverage outlets in mainland China, which could be considered as a significant portion of the catering industry. Assume the product wins 5% of all buffets' needs, and purchasing such products is committed in one year.

Considering that a restaurant may require multiple such products to meet the demand, the products per restaurant is assumed to be 10. Therefore, the product's total demand across one year is approximately 280,000 units, around the corner between large volume batch production and mass production.

On the flip side, given the product's tentative nature, thus lack of trust by the catering industry, actual sales are likely to be lower at first. Accordingly, mass production techniques, such as production lines, could be utilised. At the same time, the actual manufacturing method can be variable to achieve unique shapes and reduce the total cost. Further, the proposed idea also needs to be manufacturable, packable, and transportable.

3.2 Size Restrictions

The size of dining plates is crucial if the final product needs to collect or interact with used plates directly. First-hand research with several buffet restaurant managers and second-hand research on the average sales of different sizes' plates on E-commercial platforms are performed to confirm the dimensions of the standard plates. As a result, buffets are likely to use plates with a diameter between 6 to 8 inches. That means any containers designed to accommodate plates need a diametergreater than 20.32 cm.

In addition to the restriction on minimum size, it is obvious that the product should never be too large, taking too much space and hard to store or transport.

4 Concepts Development

After adequate insights are discovered from research, the development of conceptsis conducted following an iterating strategy that is repeatedly broadening and narrowing the focus. Such an approach helps the develop new ideas from distinct perspectives while focusing on the issue's core causes. In this section, the methodology and main works of each iteration will be introduced. After that, the chosen concept will be defined. Finally, the prototyping and preliminary evaluation will be covered as well.

4.1 Methodology

Multiple iterations are hired during the development stage to discover an optimum approach to addressing the complex problem of food waste in Chinese buffets. Specifically speaking, in most iterations, the following tasks are carried out:

1. Brainstorming based on the idea from the last iteration or research insights
2. Describing or sketch multiple directions or ideas
3. Evaluating all the directions or ideas regarding the viability and against the problem definition
4. Clustering existing directions or ideas by exploring new directions or ideas with advantages from the previous ones while avoiding their drawbacks

4.2 Iteration 1

In the first section, directions are brainstormed based on research insights. Then, to explore more possibilities and confine the development into the most promising direction in a limited time, they are proposed as aims descriptions instead of specific solutions and sketches.

4.2.1 Directions Generation

1. **Re-design of Buffet Warmers**

This direction aims to re-design the most iconic object in buffet restaurants, the buffet warmers. Warmers under the buffet setting are the containers that filled by the staff with food prepared by the kitchen and keep the food warm before customers taking them to consume. Therefore, the buffet warmers could be considered a key object in a buffet system's food cycle, which links with food waste before and after the customers. An optimised buffet warmer design could aim to fulfil the following characteristics:

- Utilise less energy to preserve food temperature
- Ensure uniform heating of food
- Make a fewer amount of food looks like more, thus reducing food waste if not picked up after one meal
- Easier for customers to pick food
- Easy to fill and clean

2. **Front-back Connection (Smart Buffet)**

Try to tackle food waste from the perspective of data science: designproducts that collect raw data during multiple stages of food flow, while ensuring customers do not feel monitored or under-served. Also, design products that make it easy for staff to collect data and check forecasts from the system proactively.

The principle behind it is data mining: using large amounts of data to fit machine learning model. The model could then predict possible food waste whenever new dishes are about to be prepared (Witten *et al.*, 2016). Thus, the kitchen could interactively control the volume to prepare or even purchasing of ingredients. Specifically, product concepts could:

- Gathering data such as food amounts and types by the deployment of sensors and Near Field Communication (NFC) tags on utilities of multiple stages of buffet

- Help staffs to collect data and display insights in an optimum way

3. **Customer Behaviours Nudging Products**

Nudge theory is a well-known concept in behavioural science. It refers to small modifications in the environment that are inexpensive and easy to implement, which could influence the behaviours and decisions of groups or individuals (Thaler, 2009). In the context of food waste problem in buffets, as instances thefollowing ideas could be considered :

- Re-design of the dinnerware. With a higher percentage of the diameter designed as flat rim, users might feel a sense of premium as well as a smaller area to put food. This modification also helps them holding the plates easier.
- Re-design of the food picking up procedure. Try to make the task of "take a small amount of food from the food serving area" enjoyable or not annoyingat least. For example, by making it semi-automatic or fun. This approach could promote the "little and often" principle, leading to less food waste produced by the customers.

4. Other minor directions

During the first round of ideation, sketches are also generated to explore possible directions. Here they are attached without detailed explanations.

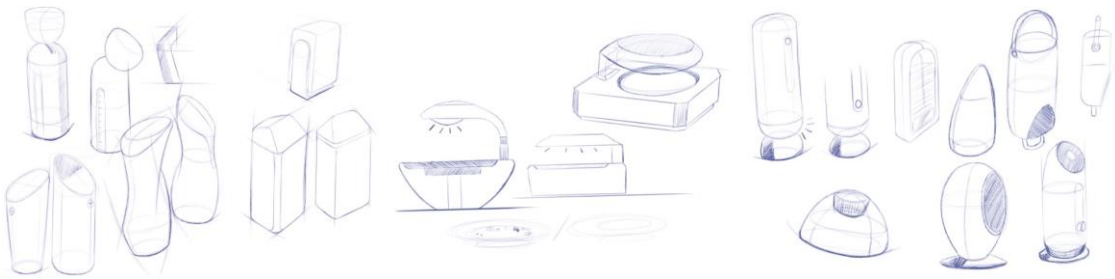

Fig. 3 Sketches from other minor directions

4.2.2 Direction Evaluation

After the proposal of three possible directions, a preliminary evaluation is conductedagainst problem definition and considerations regarding viability.

5. **Re-design of Buffet Warmers**

   Advantages:

   - Save energy directly regarding power consumption
   - Improve user experiences by providing usability features

   Drawbacks:

   - Narrow application range as different buffet restaurants might needs warmers in different styles
   - Introducing extra costs of replacing the existing warmers.

6. **Front-back Connections (Smart Buffet)**

   Advantages:

   - Systematically and scientifically address the problem
   - Suit for a broader range of buffets if the products are not noticeable to thecustomers
   - No need of replacing the existing products if the idea could lead to a setof universal add-ons

   Drawbacks:

   - Tricky to ensure data fidelity while maintaining the same user experience
   - Can hardly raise customers' awareness towards less wasteful behaviours

7. **Customer Behaviours Nudging Products**

Advantages:

- Improve user experience by providing better usability
- Raise customers' awareness of food preserving

Drawbacks:

- Possible extra costs on replacing the existing utilities
- Challenging to nudge the customers while preventing them consider the restaurant as not generous

4.2.3 Direction Clustering

At this stage, the most outstanding strengths and the worst weaknesses from the above directions are summarised. Then, the next iteration will be built on top of these insights.

- Raise the awareness of customers toward preservative behaviours.
- Gather data about food consumption, thus use for analysis.
- Prevent customers from feeling watched or restricted (thus consider the restaurant is petty or annoying). The product should not disturb customers whodo not want to interact with it.
- A low extra cost is desired. For example, an idea that requires replacing existing dinnerware is something to be avoided.

4.3 Iteration 2

Given the insights derived from iteration 1, the second iteration aims to explore the nudging of user behaviours. Therefore, additional research is carried out to discovermore opportunities.

4.3.1 Additional Research

1. **Why do people love buffets?**

   It is crucial to discover the core competencies of the buffet restaurants and try to utilise such competencies sustainably. A desirable result could solve the food waste problem and boost the restaurant's business as well. Based on secondary research and interviews, here is a summary of the positive competencies that a typical buffet could provide:

   - The food is always ready to be consumed, so the customers could eatwhatever and whenever they want.
   - Customers never need to place complicated requests to waiters as they couldtake only as much of something they want.
   - Customers have chances to try out new dishes at minimal costs or even discover their new favourite food.
   - What you see is what you get: customers can see and smell the actual food.
   - Customers are open to an enormous selection at one meal, and they could mixdifferent food to make the meal nutrition balanced.

2. **User Journey: from the customers' perspective**

   A user journey is summarised from customers' perspective on observation, interview, and secondary research. It is essential to understand their typical behaviours in a buffet restaurant and analyse the related psychological activities if an approach starting from customer behaviours is desired.

Fig. 4 User journey of typical customers in buffet restaurants

3. The right things to do in buffets

Considering more factors that might influence customers' behaviours, the effect of awareness on manners and rules are also significant. Even though customers could eat what they want, however they want, and as much as they want in buffets, this does not mean there are no manners. According to first-handresearch with buffet managers and secondary research on cultural backgrounds, the manners to be observed in buffets are as follow:

- Customers should avoid stacking too much food on plates.
- Follow the principle of "little and often": the more times someone walks backand forth between his/her table and the serving area, and the more plates he/she used, the better his/her manners are.
- Customers should only take his/her food and avoid picking food for others. (This is because those foods have a higher probability of becoming foodsthat no one recognises he/she has the responsibility to eat.)

4.3.2 Idea Generation

Given the additional research conducted above, two new ideas are developed during thisiteration with sketches based on the previous clustered direction.

1. **Food Waste Visualiser**

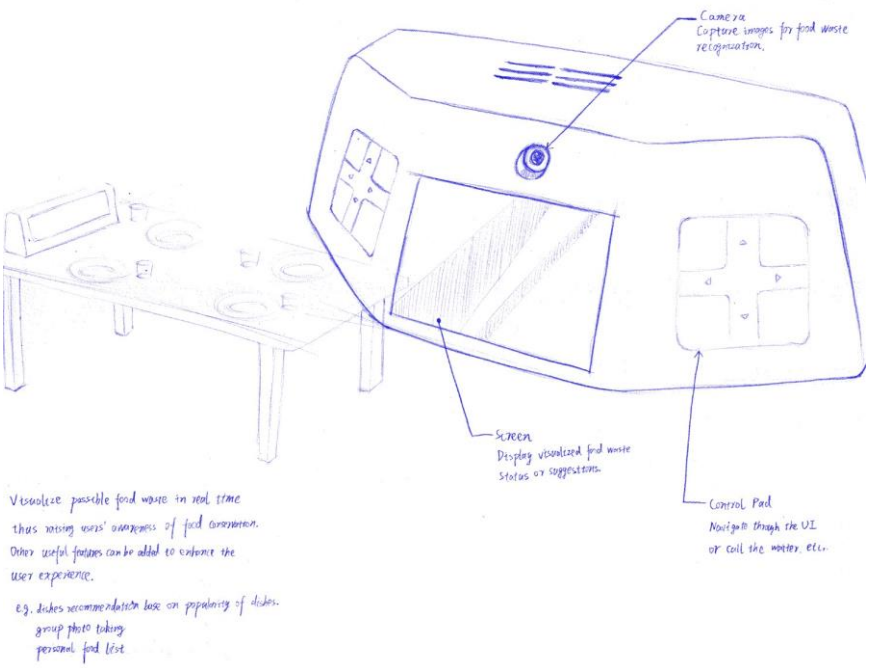

Fig. 5 Iteration 2 idea 1: Food Waste Visualizer

The first idea is a visualiser for food waste. It consists mainly of a camera, a screen, and two control pads. It is intended to be placed on the customers' tablesto scan and analyses the food customers have taken back. Then display the impacts if that amount of food has been wasted. Additional usability features could also be added to grab customers' attention, such as data-based dishes recommendation, group photo taking, or dishes list recording.

2. Self-service Empty Plates Organizer

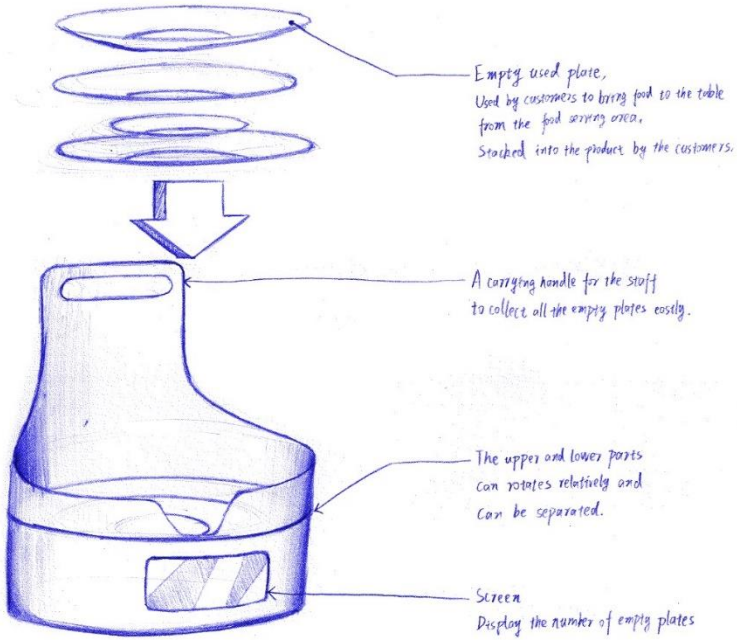

Fig. 6 Iteration 2 Idea 2: Self-service Empty Plates Organizer

This concept is a table-top self-service empty plates collector. It consists of a detachable container for empty plates and a basement with a screen to display plate amount or other information. The starting point of this concept is to promote the use of more plates, which could be an incentive for people to followthe principle of "little and often" even without notice. Additionally, gifts or coupons could be rewarded to people who put their used plates into it, making the incentive logically valid.

Besides promoting customers picking food sustainably, this idea also possesses other two advantages:

- Making customers feel that the restaurant is very generous has been suggested to use more plates and take more dishes.
- Making it easier for staff to collect used plates at once, thus speeding up the cleaning of tables.

4.3.3 Ideas Evaluation

Subsequently, preliminary evaluations are also conducted with the two ideas in thisiteration using viability analyses against problem definitions and interviews with experts and stakeholders.

1. **Food Waste Visualiser**

   Advantages:

   - Improving people's awareness of food waste.
   - Gathering of food consumption data, thus providing a basement for data-driven food waste solutions.

   Drawbacks:

   - Customers might feel their privacy been violated.
   - This idea has limited physical innovations.

2. **Empty Plates Organiser**

   Advantages:

   - Nudging the customers to follow the principle of "little and often" thus reduce food wasting.
   - Making the customers feel the restaurant is generous as they get rewards to some extent proportional to their consumption.
   - Gathering the used plates thus increases the cleaning efficiency.

   Drawbacks:

   - The reward is a paradox: higher rewards may lead to people cheating by putting in unused plates, while trivial rewards might resultin limited effects.
   - Depending on the actual design, the cleaning of such a product might be time-consuming and laborious as it directly contacting used plates with food waste.

4.3.4 Ideas Clustering

Afterwards, the most outstanding advantages and drawbacks are summarised as theguidelines to preserve or avoid, and the following is what an optimised idea should satisfy:

1. Try to promote the awareness of food preservation among the customers.
2. Try to get around the paradox about rewarding.
3. Try to design features that make the product easy to clean, suitable for differentrestaurant styles, and intuitive and easy to use.

4.4 Iteration 3

Based on the objectives summarised in the last iteration, another round of ideationis conducted to explore new solutions that fit the needs. Afterwards, form boards and sketches are produced to ideate shapes and forms, details, and interactions.

4.4.1 Idea Development

According to the clustering of ideas in iteration 2, the idea of Food Waste Visualizer is less likely to be a promising direction as the camera is a controversial feature regarding privacy protection. Therefore, the concept of Empty Plates Organiser is chosen to be developed further.

The primary issue with this idea is the paradox of rewarding customers by putting plates into it. Thus, a solution could be changing the rewards. For instance, new rewards could be virtual or psychological: to trigger people's curiosity or desire to explore, or to provide psychological pleasures like a sense of accomplishment or satisfaction, or even just fun to interact with.

Besides, more specific and practical issues had to be addressed with the progressingof iterations, and here are three that are explored during this iteration.

1. How to make the interaction intuitive? That is to say, how can untrained users understand the purpose of such a product and interact with it efficiently?

2. How to encourage people to interact with the product? For example, the stages before use, during use, after one time of use, and after the whole meal could corresponding to the concept's attractiveness, playfulness, replayability, or meaningfulness. To what extent can it provide a sense of accomplishment or pride to the users?

3. How to optimise for better usabilities and functionalities? Features such as refusing plates with too much leftover, easy cleaning, easy unloading, and more.

4.4.2 Design Exploration

Three form boards are created to explore further and refine the concept, and a sketch is produced to define the final concept.

Fig. 7 Form Boards (see the appendix)

Fig. 8 Final sketch of the concept

4.5 Concept Definition

The final concept is an empty plate collecting device placed on customers' tables or serving areas in buffets. It mainly consists of three parts: the base, the housing, and the inner container. In practice, customers will firstly see the sign on the housing asking for used plates and the built-in screen with slogans and images to encourage cooperation. They will then understand that the product enables them to return used plates without leftovers. Further, the screen will show the restaurant's promise of donating to people suffering from food shortages, proportional to the used plates put into the product by customers.

When a plate is put into the internal container, an infrared sensor will be activated to check whether the amount of food remaining on the plate is low enoughto accept. In addition, a light source inside the base will change its colour brightness to interact with the user, as well as the screen will display a message to inform whether the plate is acceptable. If the plate is accepted, the internal container's bottom will be lowered by a hydraulic supporter to make room for the next plate. Furthermore, the screen will be updated to the new amount the restaurant will donate, and a message appreciating the user's contribution fighting against food waste and food shortage will be displayed.

Once the internal container has been filled with used plates, it is necessary for staff to manually take out the inner container and bring it back for cleaning. Cleaning is easy as the two parts of the inner container can be disassembled.

4.6 Preliminary Test and Evaluation

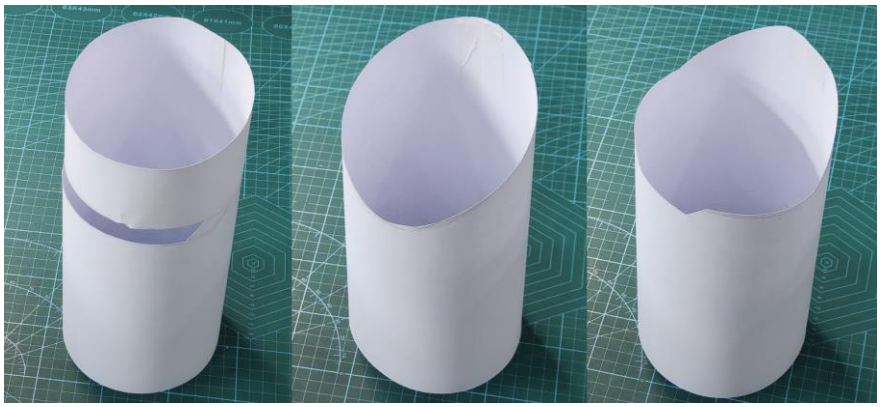

Fig. 9 Low-fidelity paper prototypes

The three concepts generated by sketches are prototyped with papers to evaluate viability and aesthetics. These prototypes show that the proportions of the conceptsneed to be improved: the slender shape cannot accommodate plates while ensuring the product has a proper size. Therefore, it needs to be changed to a more horizontal form.

5 Product Development

After the feasibility of the final concept is confirmed, the stage of product development is started. This stage includes CAD modeling, details finalisation, prototyping, testing, and evaluation based on the prototype.

5.1 CAD Model

SOLIDWORKS from Dassault Systems is used to build the CAD model. First, the concept isconstructed firstly in a part file to ensure the dimensions and fits between components are appropriately assigned. Next, sketches and faces are built to provide correct shapes and forms before thicken command is utilised to form solid bodies. Then, body features such asfillets and rims are created to refine the details. Lastly, the Save Bodies command is usedto split the master part file into individual part files and an assembly file.

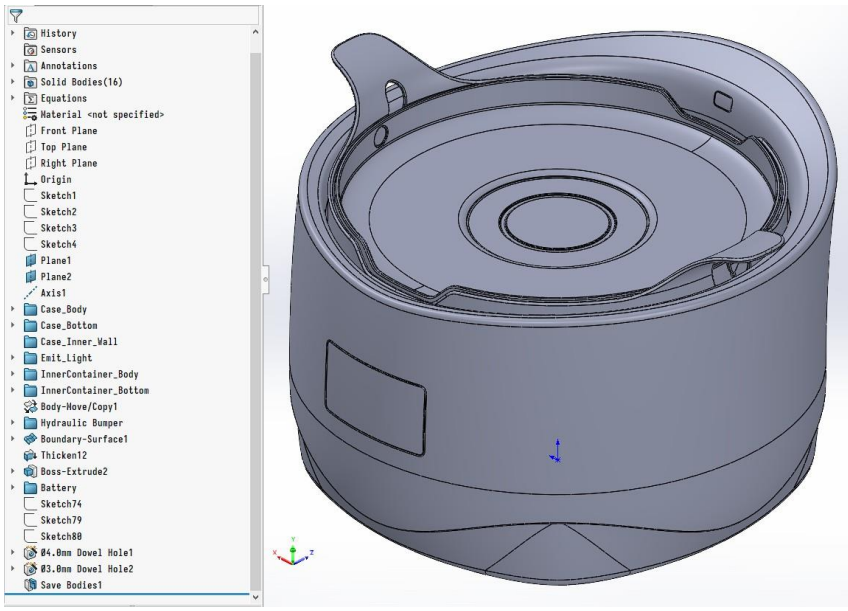

Fig. 10 Final CAD model (master part file)

5.2 Prototyping

Stereolithography (SLA) 3D printing is utilised to fast manufacture the prototype due to its high geometrical accuracy, considerable high efficiency, and its high compatibility with a wide range of resins in different colours (Zhang and Jung, 2018). After that, optimisations regarding the CAD file are carried out to ensure printability. For example, the model is scaled down to fit the printer's size, and wall thicknesses are increased to approximately 1.5 mm after scaling to prevent cracking.

6 Materials and Manufacture

The material for this product is selected based on the parts' designed functionalities and possible scenarios. Here is an exploded view in which the parts'chosen materials and manufacture are demonstrated. Except for standard parts and out-sourced parts, ABS, PC, and HDPE are selected.

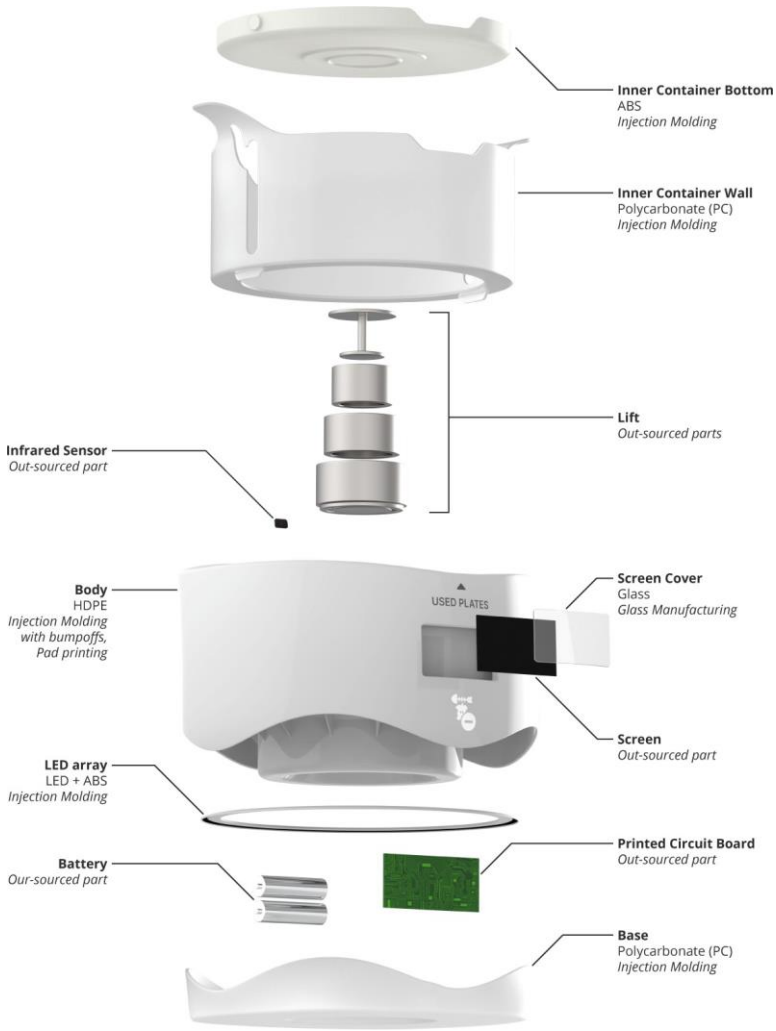

Fig. 11 Exploded view

ABS is selected for the Inner Container Bottom, considering its good thermal resistance up to 135℃, adequate mechanical strength, and resistance to environmental attacks. Injection molding is chosen as the manufacturing method because of its low average price and fast production speed. The bulges on two sides aremanufactured with sliding cores on the molding dies to eliminates undercuts.

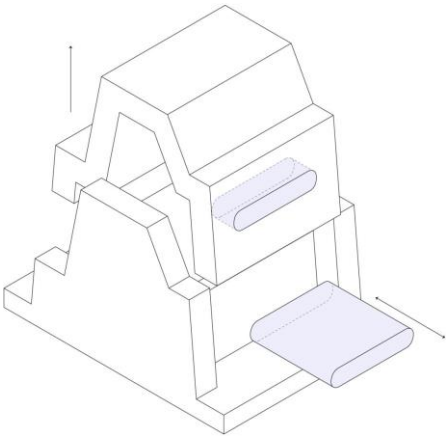

Fig. 12 Sliding side-actions in injection molding

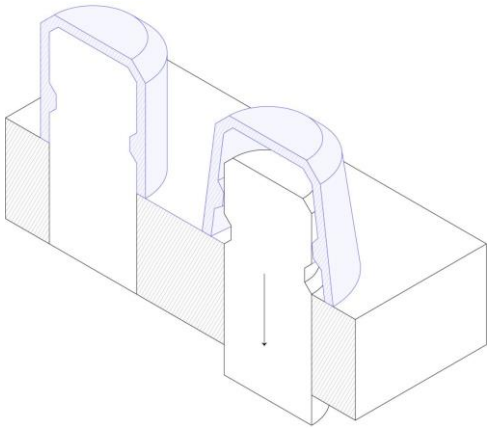

Fig. 13 Injection molding with bumpoffs (stripping undercut)

As for transparent parts, such as the Inner Container Wall and the Base, polycarbonate (PC) is selected. This is because of its transparency and its thermal resistance, adequate mechanical strength, and resistance to water and grease. Injection molding is also chosen to manufacture the parts. The hole on theInner Container Wall is achieved by sliding cores.

Lastly, high-density polyethylene (HDPE) is chosen to manufacture the body. This decision is due to its low water absorption and adequate mechanical strength. Further, consider the fact that mild and smooth undercuts are introduced to the design, which cannot beresolved with sliding actions, thus injection molding with bumpoff is necessary. Bumpoff, or stripping undercut, refers to the injection molding ejection with features deform over the mold (Malloy, 2011). HDPE is known for its processabilityand fair stiffness, thus been a great material to utilise with bumpoff molding.

7 Evaluation

7.1 Aesthetic Requirements

Fig. 14 Final renderings

This concept's round and smooth shape are meant to give the user an easy-to-use and clean feel. Furthermore, with the translucent base at the bottom and the built-in light source, the aim is to attract more users' attention and curiosity. According to the rendering, the design can meet the aesthetic requirements of many different interior styles. Furthermore, all the curved surfaces have a smooth and controlled transformation that does not cause visual dissonance.

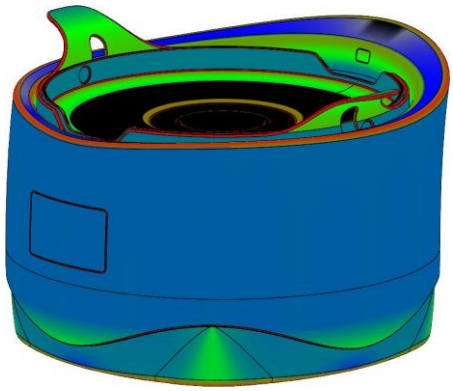

Fig. 15 Curvature analysis

7.2 Functionality Requirements

The working prototype could hardly be produced for the time being due to technology constraints. Therefore, a virtual prototype is used for functional evaluation. One of the most essential features of the concept is that Inner Container Bottom lifted and lowered according to the plate placed. Such motion is enabled by the information gathered by the infrared sensor and lifting power generated by astep motor under it. The section views before and after this action are as below.

Fig. 16 Section views before and after the Inner Container Bottom is lowered

8 Final Design

8.1 Product Description

To address the issue of food waste in buffets, this design provides sustainable while sufficient incentives and positive feedback to customers, leading them to unconscious practices of more preservative food picking up strategies and raising their awareness of food shortages. As a result, it can be expected that restaurants introducing this product will experience an improvement in both the food waste issue and its public reputation at a relatively low cost.

8.1.1 Major Features Descriptions

- **Screen:** display donation amount counter, slogan, and image to encouragecooperation, and a QR code for the customers to get more information.
- **Icons:** tips on how to use the product correctly, reduce misunderstandings.
- **Light:** visual interests and interaction medium.
- **Inner Container:** directly accommodate the used plates, transparent andsimple structure for easy cleaning.
- **Inner Container Base:** held by the lift underneath and carries the plates above. It can be easily removed from the container for further cleaning.
- **Infrared Sensor:** check if there are too many leftovers on the currently placedplate (if so, inform the user via the screen and light interaction).

8.1.2 System Analysis

The proposed design is not only a product but a system. As shown below, the plates collector plays a vital role between the customers and the buffet restaurant: it works as a medium providing incentives and interactions to the customers, thus encouraging them to pick food "little and often". Staff could then collect the plates fed customers at once. Further, the restaurant will gain a better public imagedue to their donations committed to food-deprived populations. Therefore, such a system enables a win-win-win situation for customers, the restaurants, and the general public.

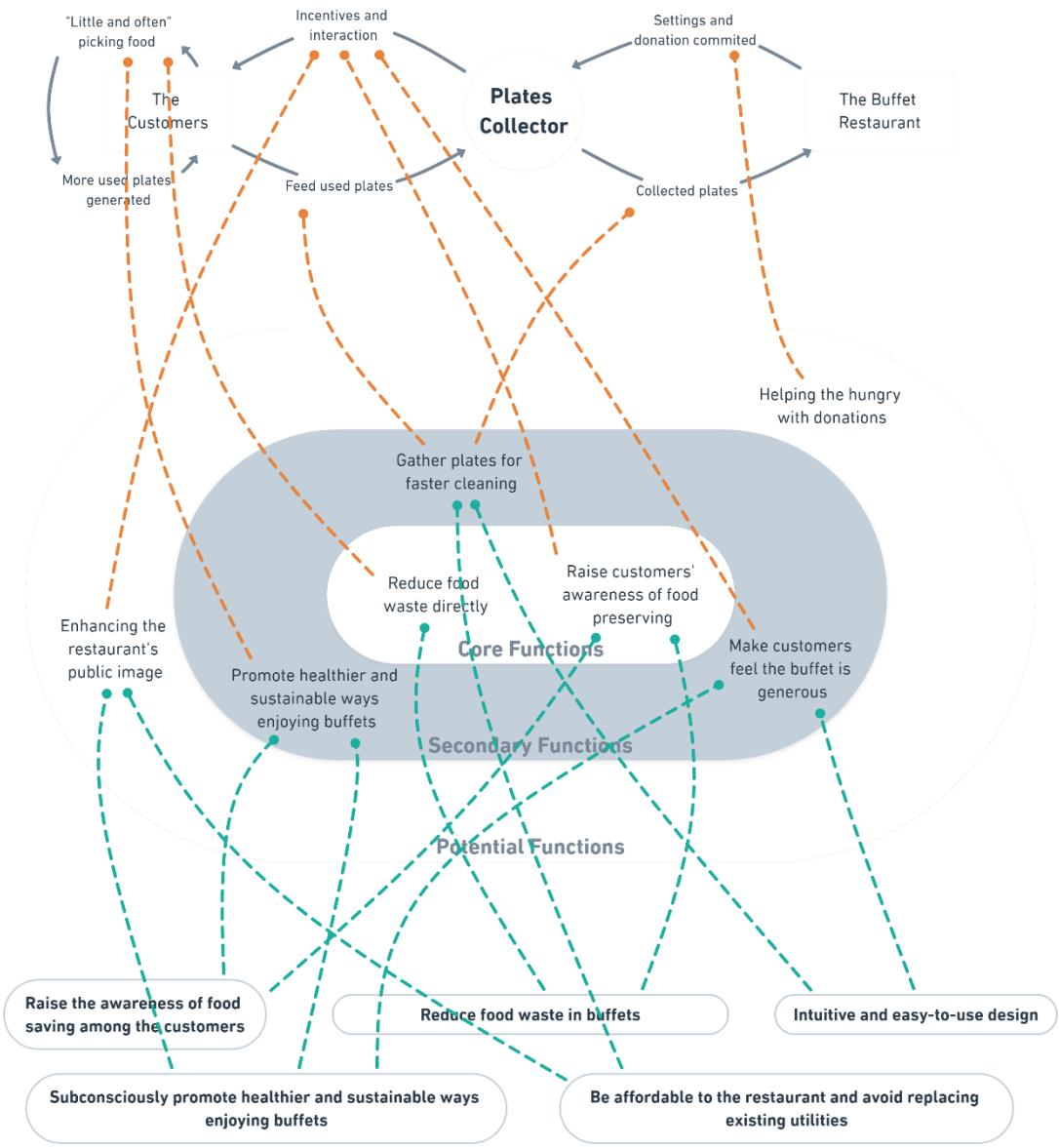

Fig. 17 System analysis

8.2 Product Differentiation

This design differs from existing products mainly in its smart way resolving the contradiction between customer expectations and actions in buffets and reducing food waste. Specifically, it serves as a medium to provide the right incentive for users to get users to reduce food waste while ensuring their experience and raise their awareness of the food shortage issue.

8.3 Design Functionality

The use of this concept could be divided into cycles, each of which starts with an empty inner container and waits for customers to fill it. The description of stages inside a cycle is as follow:

1. **Attention attraction:** the built-in light is breathing and the screen is displaying donation counter. Customers are expected to be attracted or become curious.
2. **Interaction and positive feedback:** Customers understand the propose and interaction and place used plates into the product. They get positive feedback including the increasing donation counter, appreciation messages displaied, and the changing built-in light. Therefore, they tend to take less food frequently to get more plates.
3. **Fully filled:** after the product is full of used plates, the light turns red as a sign of pausing the interactions. Staffs will be notified through mobile APP to recycle the collected plates.
4. **The end of one cycle:** the staff remove the entire inner container with used plates using its handles and bring it back to the kitchen for cleaning. The product sync the donation amout of this cycle with cloud server and reset for the next cycle.

(4951 words)

Reference

Eckert Matzembacher, D., Brancoli, P., Moltene Maia, L. and Eriksson, M. (2020) 'Consumer's food waste in different restaurants configuration: A comparison between different levels of incentive and interaction', *Waste Manag,* 114, pp. 263-273.

Gustavsson, J., Cederberg, C., Sonesson, U., Van Otterdijk, R. and Meybeck, A. 2011. Global food losses and food waste. FAO Rome.

Malloy, R. A. (2011) *Plastic part design for injection molding : an introduction / Robert A. Malloy.* 2nd ed. edn. Munich : Cincinnati, Ohio: Munich : Hanser Publishers

Cincinnati, Ohio : Distributed in the USA and in Canada by Hanser Publications.

Thaler, R. H. (2009) *Nudge : improving decisions about health, wealth, and happiness / Richard H. Thaler, Cass R. Sunstein.* Rev. and expanded ed. edn. New York: New York : Penguin Books.

Wang, L.-E., Liu, G., Liu, X., Liu, Y., Gao, J., Zhou, B., Gao, S. and Cheng, S. (2017) 'The weight of unfinished plate: A survey based characterization of restaurant food waste in Chinese cities', *Waste Management,* 66, pp. 3-12.

Witten, I. H., Frank, E., Hall, M. A. and Pal, C. J. (2016) *Data Mining: Practical Machine Learning Tools and Techniques.* San Francisco: San Francisco: Elsevier Science & Technology.

Zhang, H.-q., Wu, W.-w. and Wang, X.-f. 2014. Influencing factors of the development of China's catering industry. IEEE.

Zhang, J. and Jung, Y.-G. (2018) *Additive Manufacturing.* Saint Louis: Saint Louis: Elsevier Science & Technology.

Appendix

Intuitiveness and Playfulness

Interaction - Before & during use

Attractiveness and Feedbacks

Interaction - Before & during use

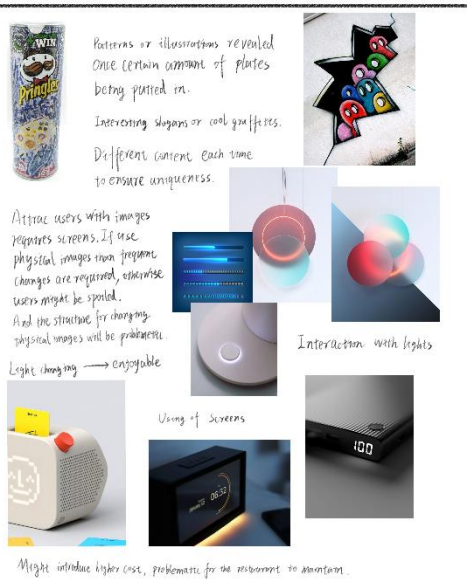

Sense of pride, rasing of awareness

Interaction - After use - Customers

ACTION AGAINST HUNGER

免费午餐

Customers	Restaurant
Use the product to collect used plates	⇒ Donation to fight hunger
Awareness for food saving	⇒ Less waste
Pride of donation	⇒ Better public image

Easy to reset, unload, and clean

Interaction - After use - Staff

Environmental and interesting

General form, Semantics, Style

Versatile and perception

Details, Interactions, Style

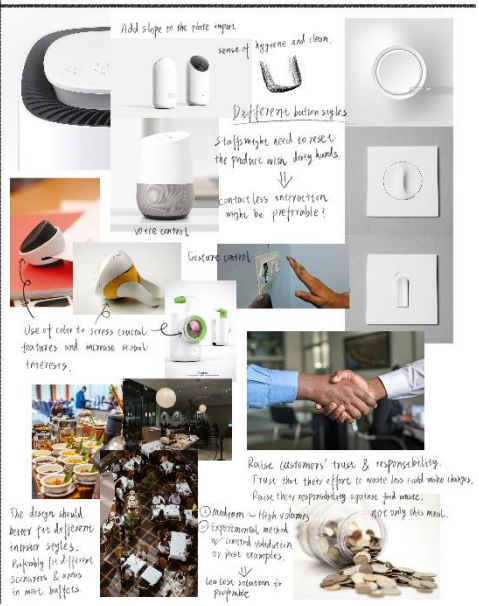

DO NOT SCALE

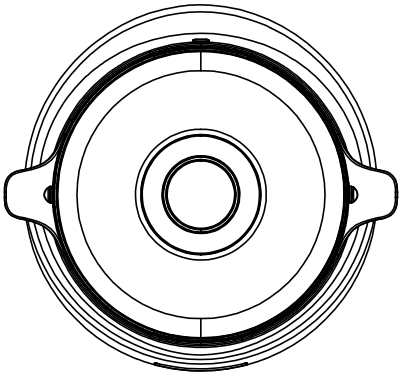

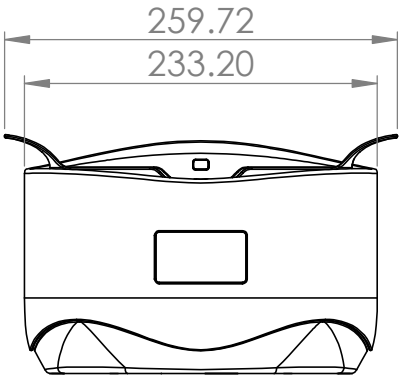

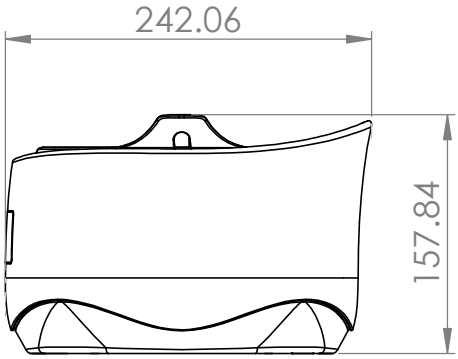

	University of Nottingham UK | CHINA | MALAYSIA			
TOLERANCE LINEAR: ± 0.5 ANGULAR: ± 1°	PLATES ORGANIZER			
ALL DIMENSIONS ARE IN MILLIMETRES	ISSUE DATE 20210523	REVISION A	DRAWN BY ChangyuanXIE	DRAWING NO. 1
DRAFTING STANDARD BS 8888	MODULE MMME3033	SCALE 1:5	SIZE A4	SHEET 1 of 1

SOLIDWORKS Educational Product. For Instructional Use Only.